**Lecture #5:**

### 0.0.1 Divide & Conquer Method (Continued – More Examples):

**Example 1** *Multiplication of two $n \times n$ matrices by Strassen's Method: We are given two $n \times n$ matrices $A$ and $B$ and we want $C = A \cdot B$. (Page 739-745 of your book)*

Recall

$$C_{i,j} = \sum_{k=1}^{n} a_{i,k} \cdot b_{k,j}$$

Using this, in the usual manner, we will do $\Theta(n^3)$ multiplications and additions. For convenience, we assume that $n$ is a power of 2. Let

$$\begin{aligned} A &= \begin{matrix} A_{1,1} & A_{1,2} \\ A_{2,1} & A_{2,2} \end{matrix} \\ B &= \begin{matrix} B_{1,1} & B_{1,2} \\ B_{2,1} & B_{2,2} \end{matrix} \\ C &= \begin{matrix} C_{1,1} & C_{1,2} \\ C_{2,1} & C_{2,2} \end{matrix} \end{aligned}$$

where each of these is $\frac{n}{2} \times \frac{n}{2}$ submatrix of the corresponding matrix. If we do multiplication the usual way, we have 8 multiplications of pairs of $\frac{n}{2} \times \frac{n}{2}$ matrices and 4 additions. Addition of two $n \times n$ matrices is $\Theta(n^2)$. V. Strassen devised an algorithms that does fewer multiplications.

For this, let

$$\begin{aligned} M_1 &= [A_{2,1} + A_{2,2} - A_{1,1}] \cdot [B_{2,2} - B_{1,2} + B_{1,1}] \\ M_2 &= [A_{1,1}] \cdot [B_{1,1}] \\ M_3 &= [A_{1,2}] \cdot [B_{2,1}] \\ M_4 &= [A_{1,1} - A_{2,1}] \cdot [B_{2,2} - B_{1,2}] \\ M_5 &= [A_{2,1} + A_{2,2}] \cdot [B_{1,2} - B_{1,1}] \\ M_6 &= [A_{1,2} - A_{2,1} + A_{1,1} - A_{2,2}] \cdot [B_{2,2}] \\ M_7 &= [A_{2,2}] \cdot [B_{1,1} + B_{2,2} - B_{1,2} - B_{2,1}] \end{aligned}$$

Then

$$\begin{aligned} C_{1,1} &= M_2 + M_3 \\ C_{1,2} &= M_1 + M_2 + M_5 + M_6 \\ C_{2,1} &= M_1 + M_2 + M_4 - M_7 \\ C_{2,2} &= M_1 + M_2 + M_4 + M_5 \end{aligned}$$

Thus, we do 7 multiplication of $\frac{n}{2} \times \frac{n}{2}$ matrices and few more additions. Recall additions are cheaper! This gives us the recursion

$$t(n) = 7t(\frac{n}{2}) + c(n^2)$$

This is one of the examples we saw under the master theorem and we obtained $t(n) = \Theta(n^{\lg 7}) = \Theta(n^{2.81})$ which is better than before. The current best is $\Theta(n^{2.376})$.

**Example 2** *Permutation Networks (Problem 28-3, page 652)*

This section follows the notes from Professor Hal Sudburough. A switch is a circuit with two inputs, two outputs, and a control. The control can be set to one of two positions as shown below:


We want to construct a device with $n$ inputs and $n$ outputs using these switches; this device should able to output any of the $n!$ possible permutations of the inputs by setting the switches in an appropriate manner. Our goal is to use $O(n \lg n)$ switches to do this. We will assume again that $n$ is a power of 2. For example, for $n = 4$ we have:

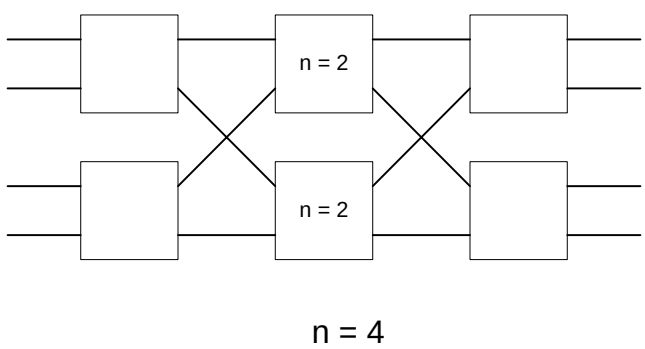

and for $n = 8$

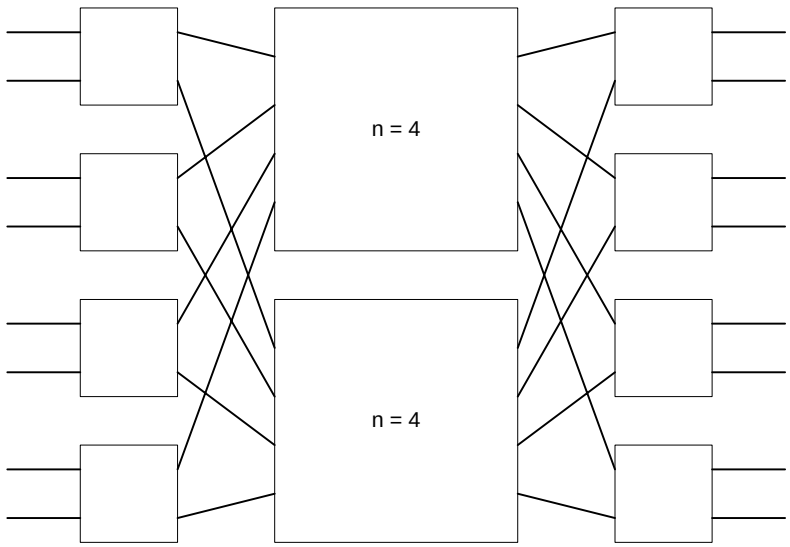


n = 8

You should get the idea in general. If we let $t(n)$ be the number of switches used for constructing a network with $n$ inputs/outputs, we have the recurrence relation:

$$t(n) = 2t(\frac{n}{2}) + n$$

The solution of this by the master theorem is $t(n) = \Theta(n \lg n)$. The exact solution is $t(n) = n \lg n$ obtained by iteration method.

We need to show one more thing: that this works correctly – we can get all the permutations of the inputs as outputs by setting the switches. For this we show how to set the switches properly. We assume that the input is $[1, 2, ..., n]$ in that order from the top to bottom. Let us look at some specific examples>

Let $n = 4$, and let the output be $[3, 1, 4, 2]$ This creates what are called "forbidden pairs" and in this case they are :$\{(3, 1), (4, 2)\}$ This means that the two elements in a forbidden pair should not be switched to the same "half"

network. See below for how the switches are set:

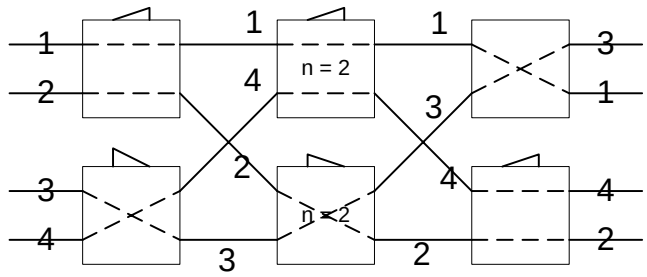


n = 4

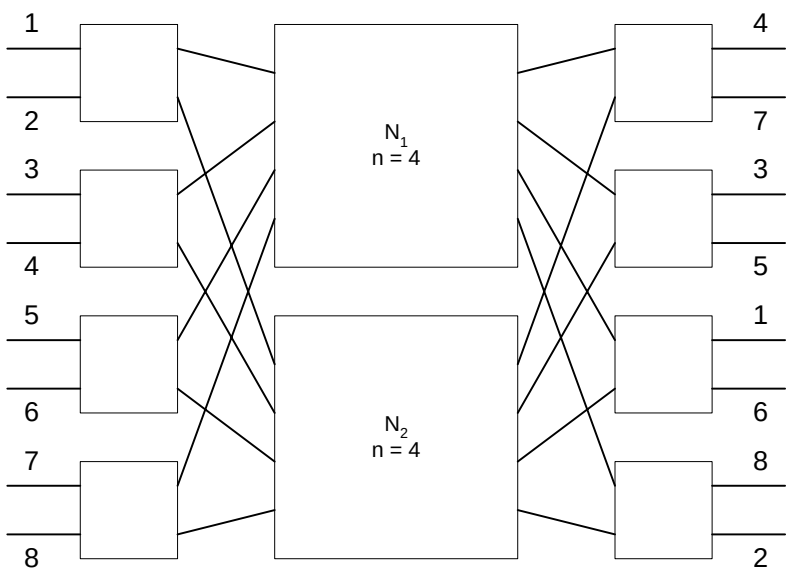


n = 8

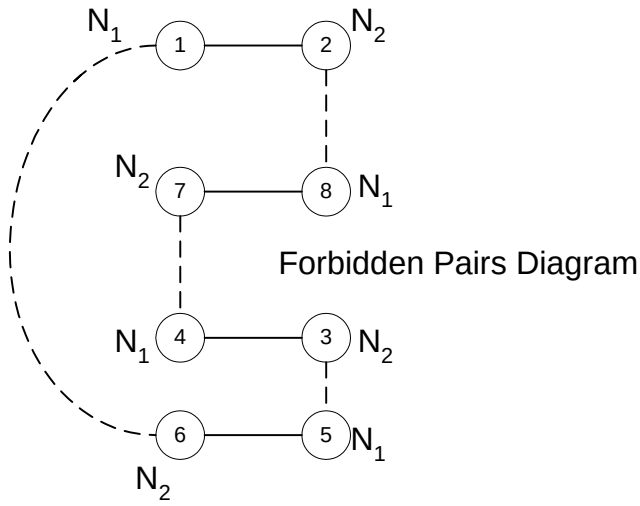


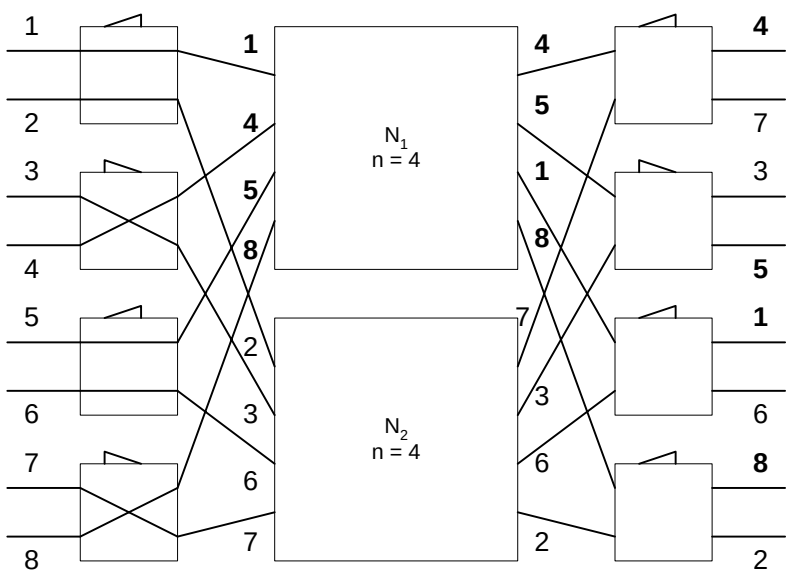


n = 8

The general case is handled in a similar manner.

The next question: can we do with fewer switches? We show below that we can not improve the order – $t(n) = \Theta(n \lg n)$. Suppose we have $m$ switches to handle $n$ inputs. Since each switch can be in one of two positions, the system can be in no more than $2^m$ possible configurations. Each configuration can only

yield one output permutation. Hence we must have

$$2^m \geq n!$$

Hence $m \geq \lg[n!] = \Theta(n \lg n)$ as we showed earlier.