Introduction to ADSL Modems

Original Lecture Notes developed by

Prof. Brian L. Evans
Dept. of Electrical and Comp. Eng.
The University of Texas at Austin
http://signal.ece.utexas.edu

Outline

- Broadband Access
  - Applications
  - Digital Subscriber Line (DSL) Standards
- ADSL Modulation Methods
  - ADSL Transceiver Block Diagram
  - Quadrature Amplitude Modulation
  - Multicarrier Modulation
- ADSL Transceiver Design
  - Inter-symbol Interference
  - Time-Domain Equalization
  - Frequency-Domain Equalization
- Conclusion

Applications of Broadband Access

Residential Application	*Downstream rate (kb/s)*	*Upstream rate (kb/s)*	*Willing to pay*	*Demand Potential*
Database Access	384	9	High	Medium
On-line directory; yellow pages	384	9	Low	High
Video Phone	1,500	1,500	High	Medium
Home Shopping	1,500	64	Low	Medium
Video Games	1,500	1,500	Medium	Medium
Internet	3,000	384	High	Medium
Broadcast Video	6,000	0	Low	High
High definition TV	24,000	0	High	Medium

Business Application	*Downstream rate (kb/s)*	*Upstream rate (kb/s)*	*Willing to pay*	*Demand Potential*
On-line directory; yellow pages	384	9	Medium	High
Financial news	1,500	9	Medium	Low
Video phone	1,500	1,500	High	Low
Internet	3,000	384	High	High
Video conference	3,000	3,000	High	Low
Remote office	6,000	1,500	High	Medium
LAN interconnection	10,000	10,000	Medium	Medium
Supercomputing, CAD	45,000	45,000	High	Low

DSL Broadband Access

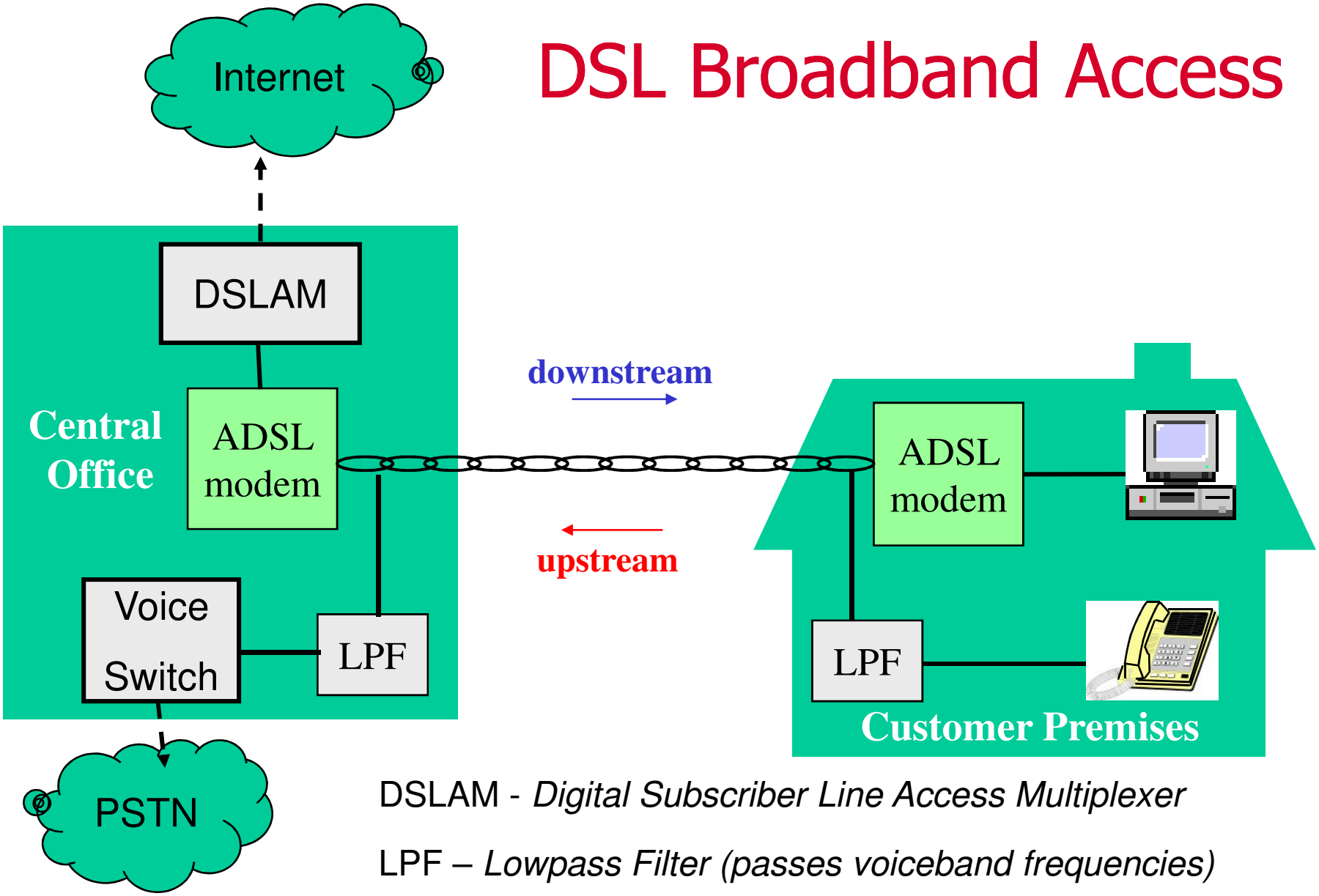

DSLAM - *Digital Subscriber Line Access Multiplexer*

LPF – *Lowpass Filter (passes voiceband frequencies)*

Spectral Compatibility of xDSL

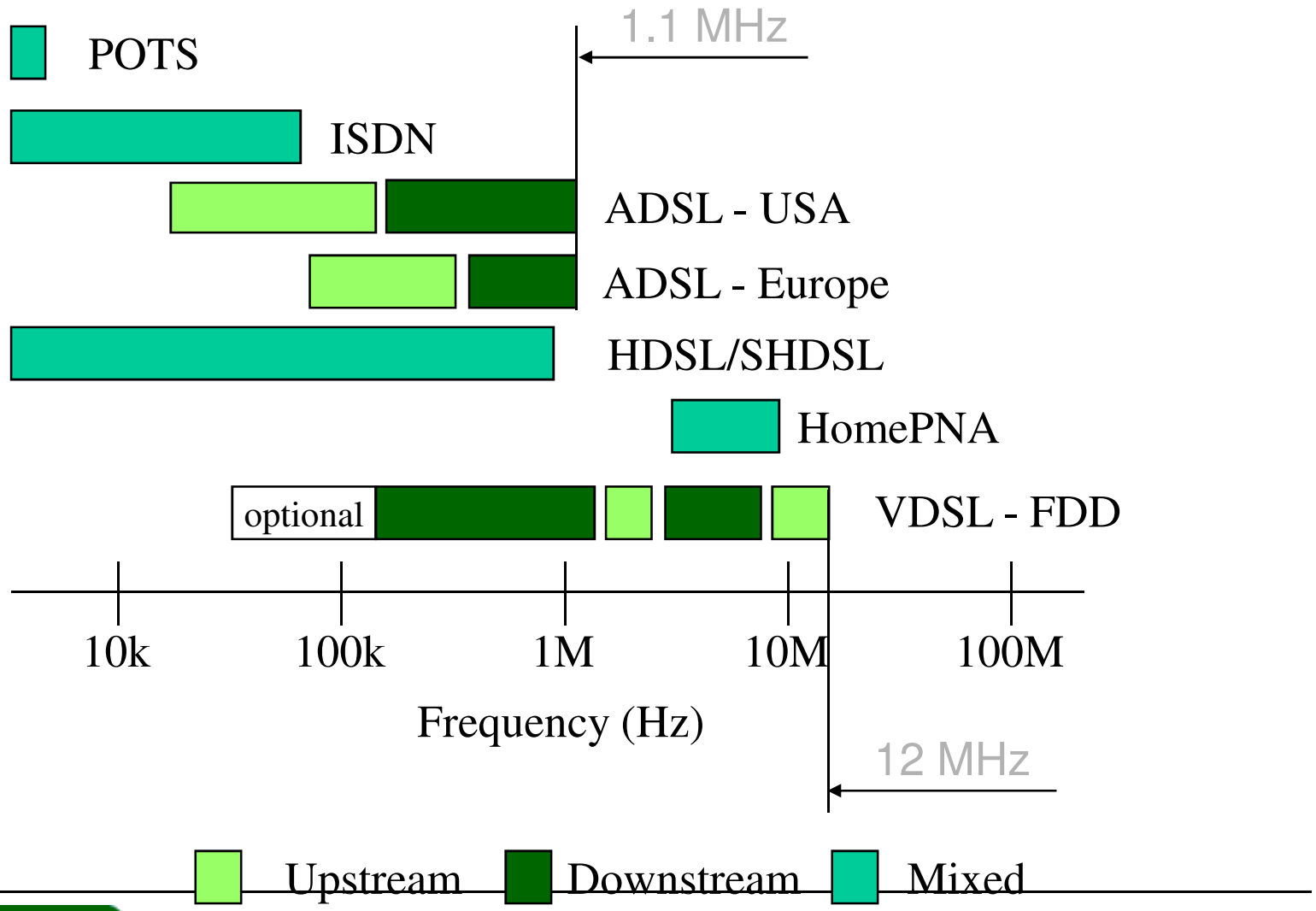

ADSL Modem

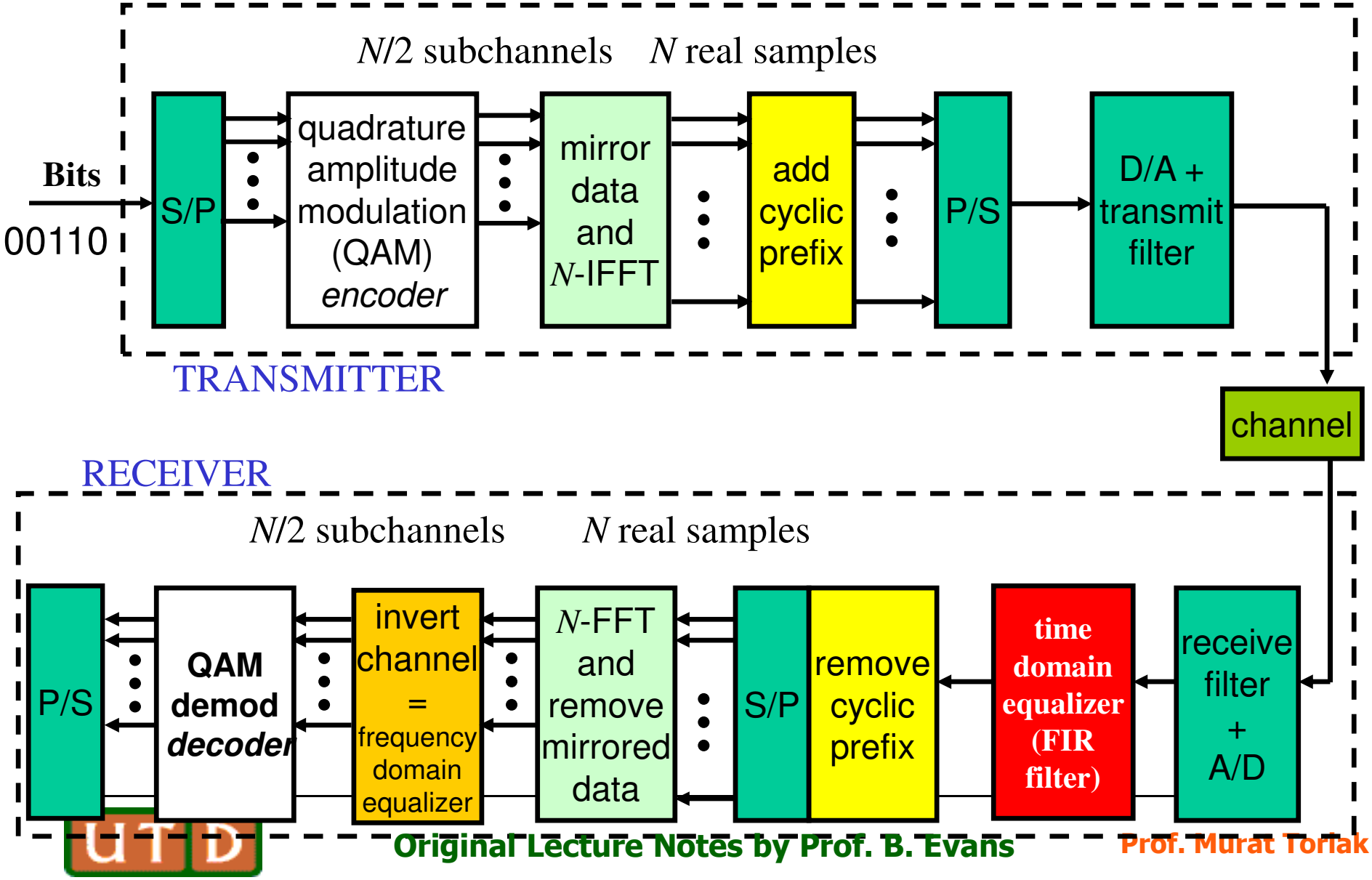

Original Lecture Notes by Prof. B. Evans

Prof. Murat Torlak

Bit Manipulations

- Serial-to-parallel converter

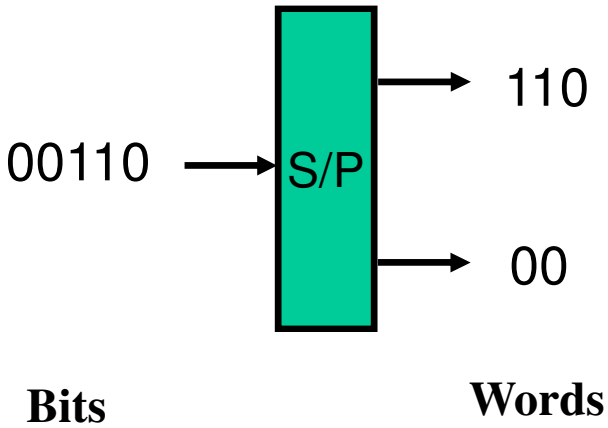

- Parallel-to-serial converter

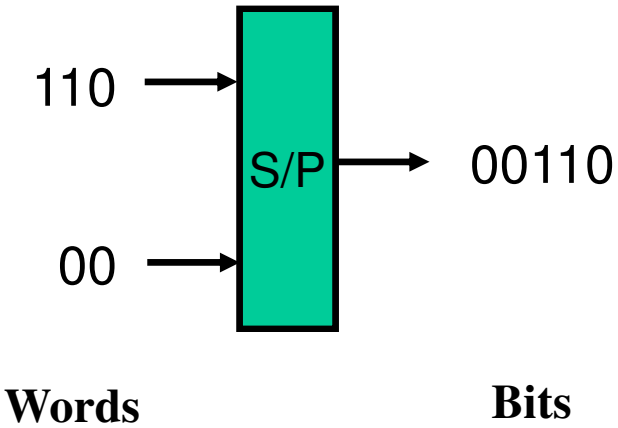

- Example of one input bit stream and two output words
- Example of two input words and one output bit stream

Quadrature Amplitude Modulation (QAM)

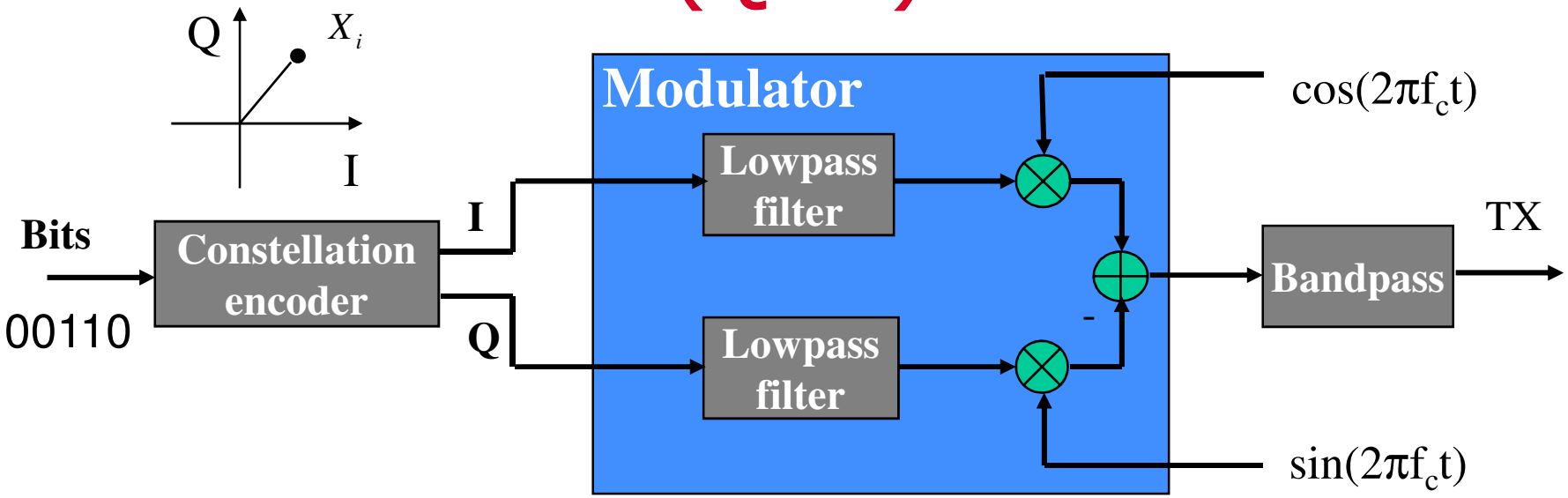

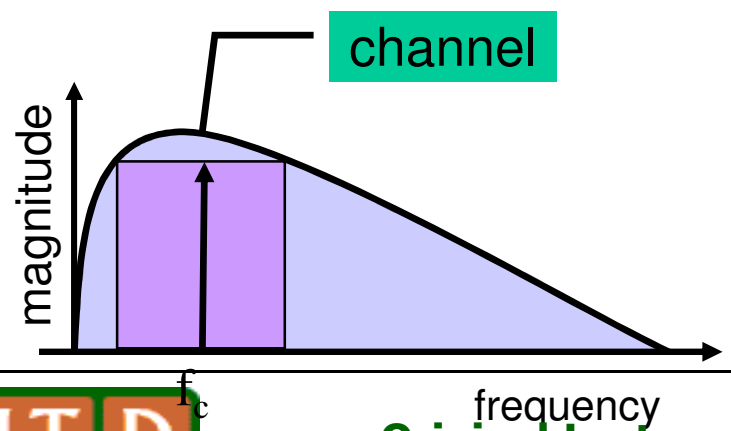

- One carrier
- Single signal, occupying the whole available bandwidth
- The symbol rate is the bandwidth of the signal being centered on carrier frequency

Multicarrier Modulation

- Divide broadband channel into narrowband subchannels
- Discrete Multitone (DMT) modulation
  - Based on fast Fourier transform (related to Fourier series)
  - Standardized for ADSL
  - Proposed for VDSL

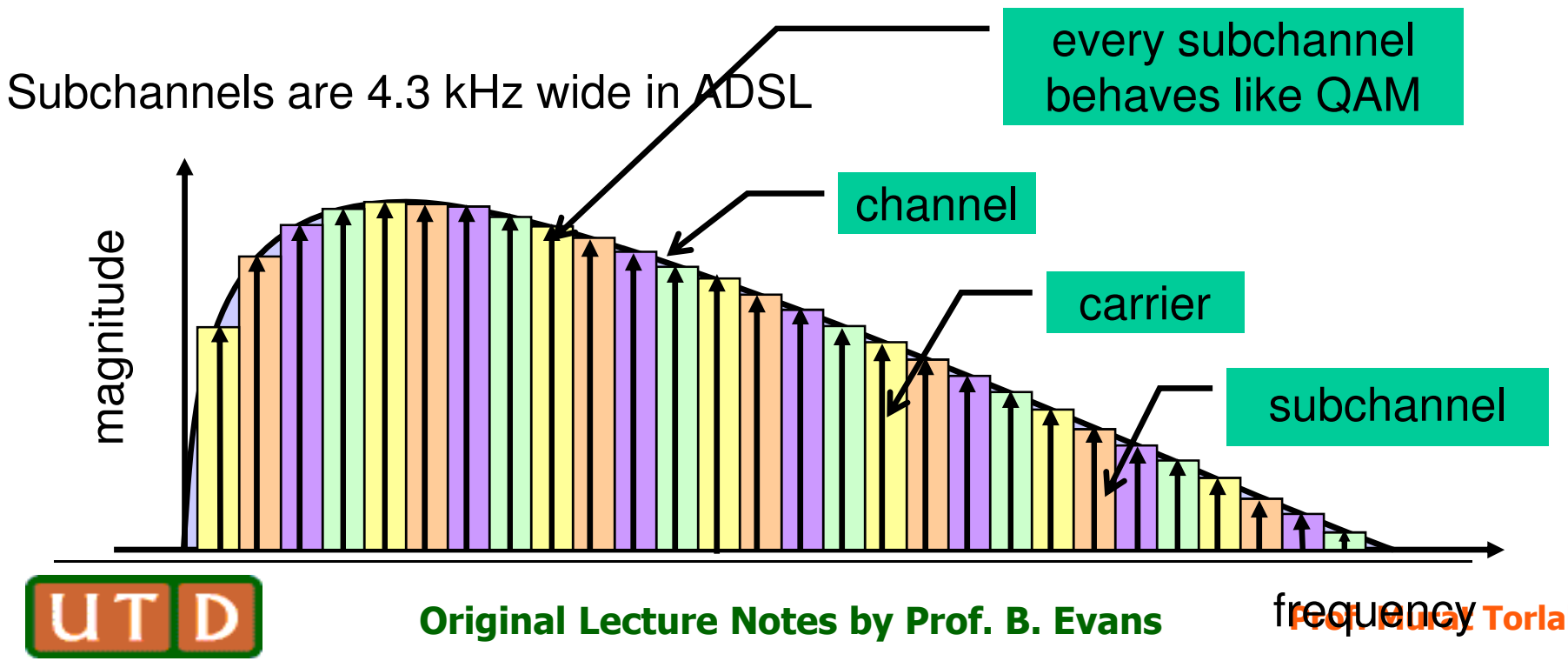

Multicarrier Modulation by Inverse FFT

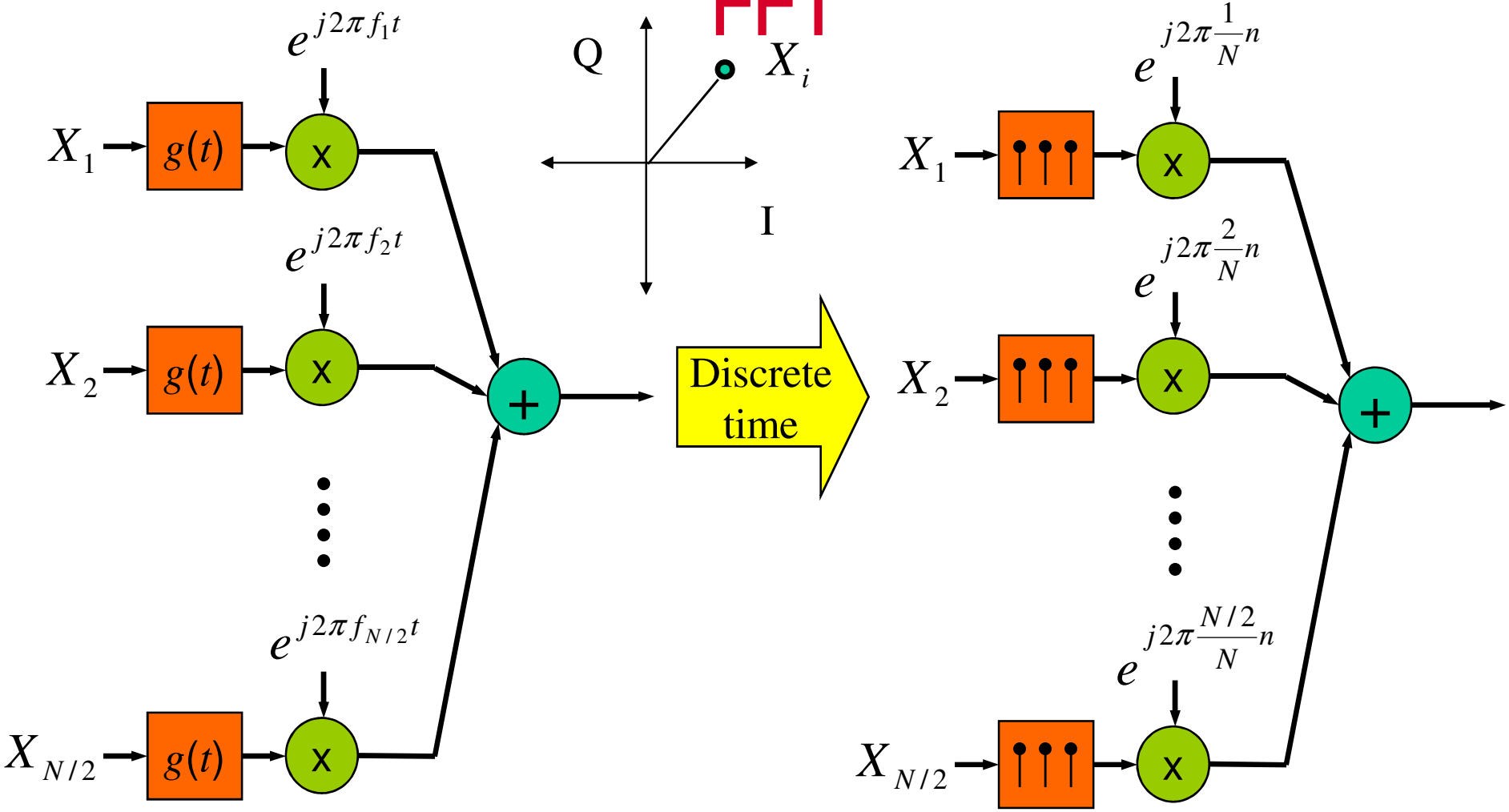

$g(t)$: **pulse shaping filter** X_i : i^{th} symbol from encoder

Multicarrier Modulation in ADSL

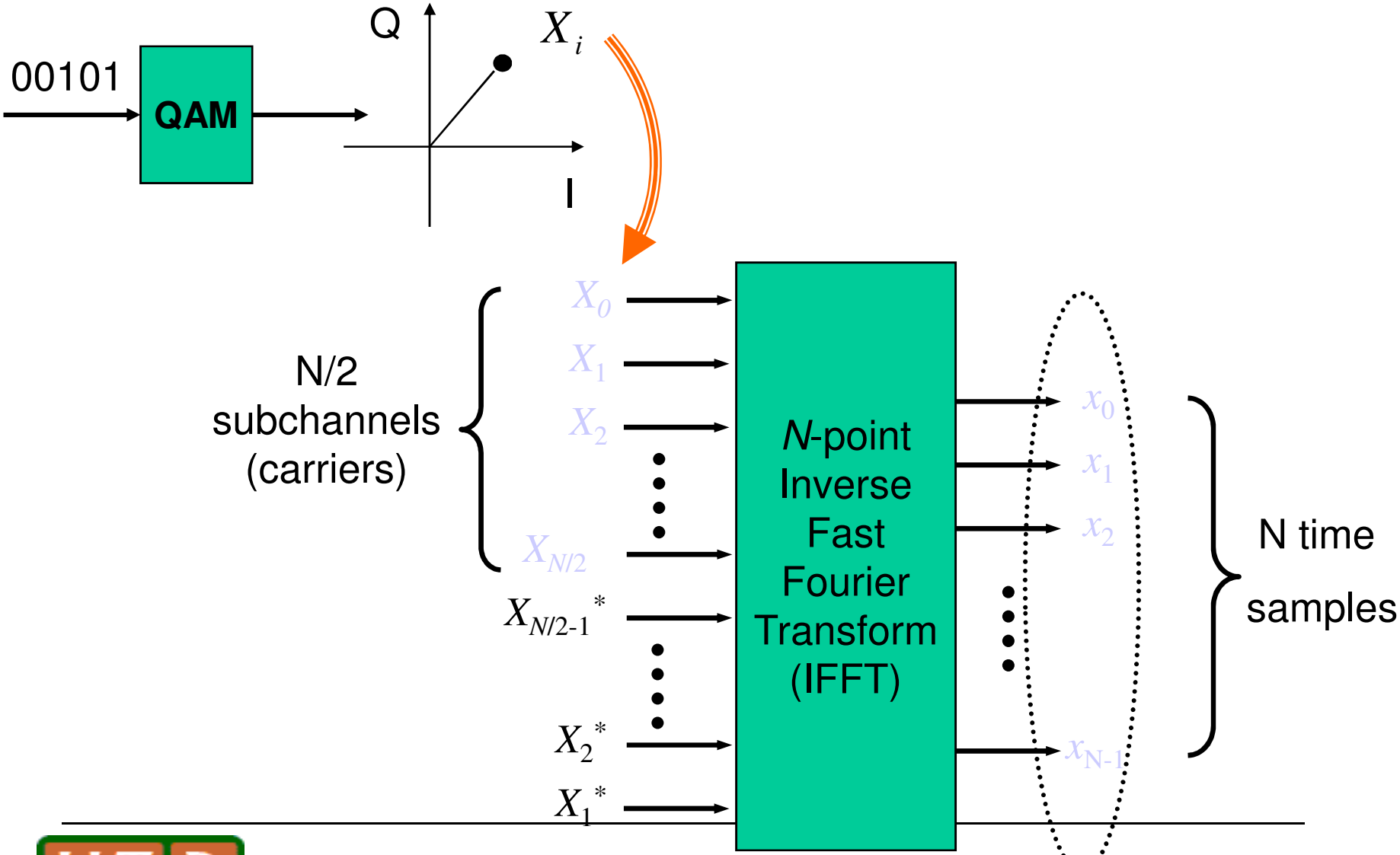

Multicarrier Modulation in ADSL

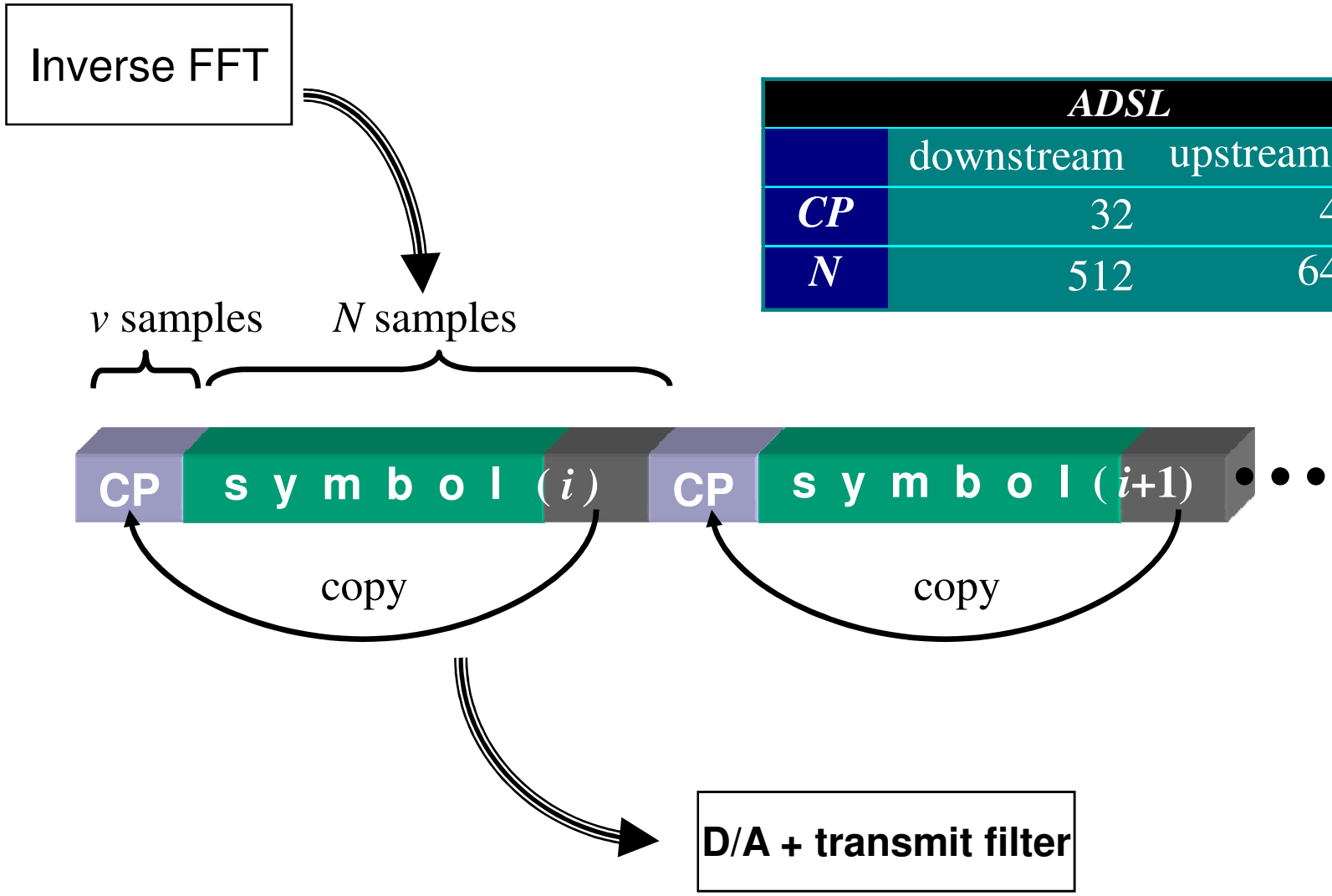

	ADSL	
	downstream	upstream
CP	32	4
N	512	64

CP: Cyclic Prefix

Multicarrier Demodulation in ADSL

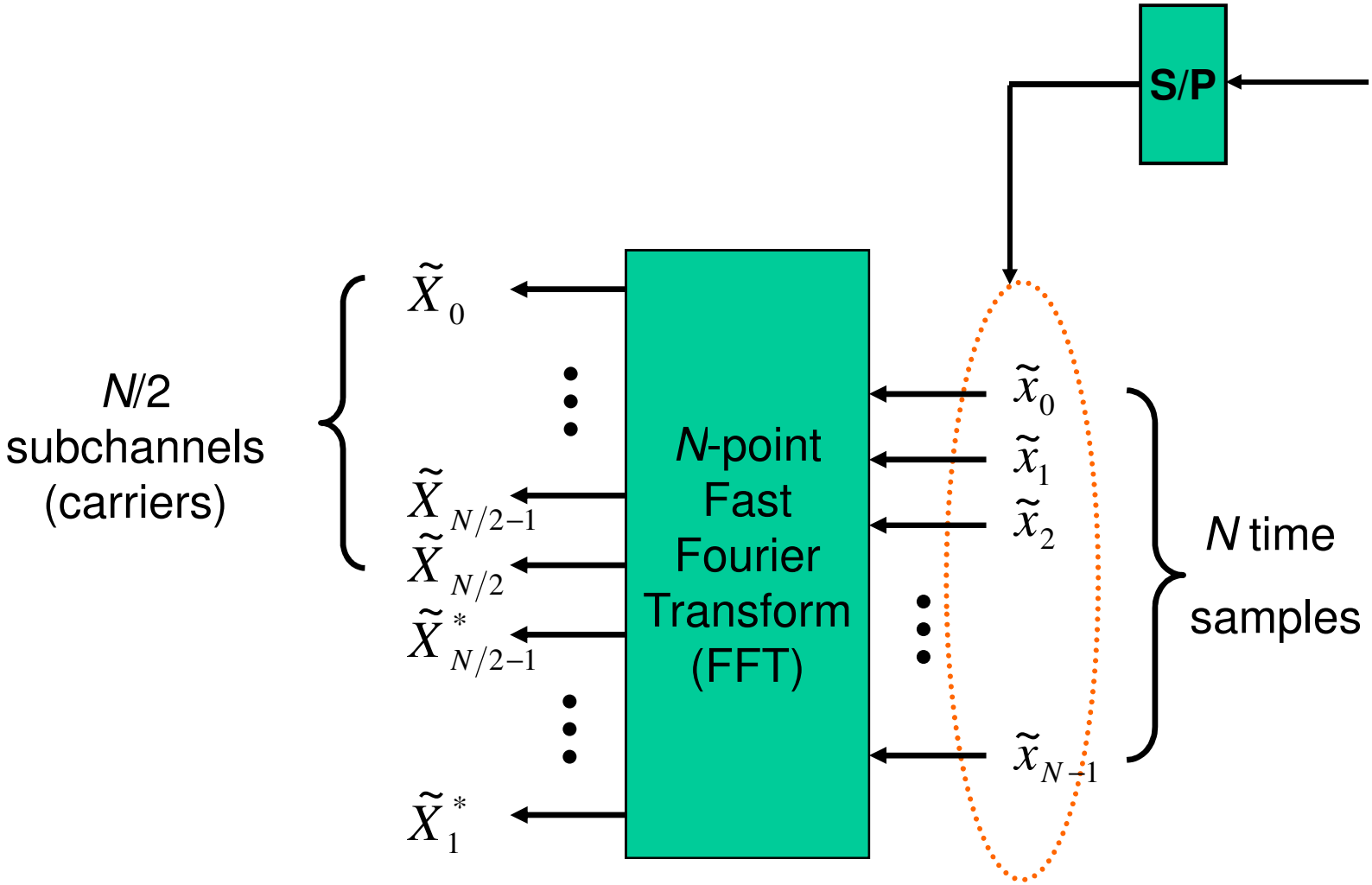

Inter-symbol Interference (ISI)

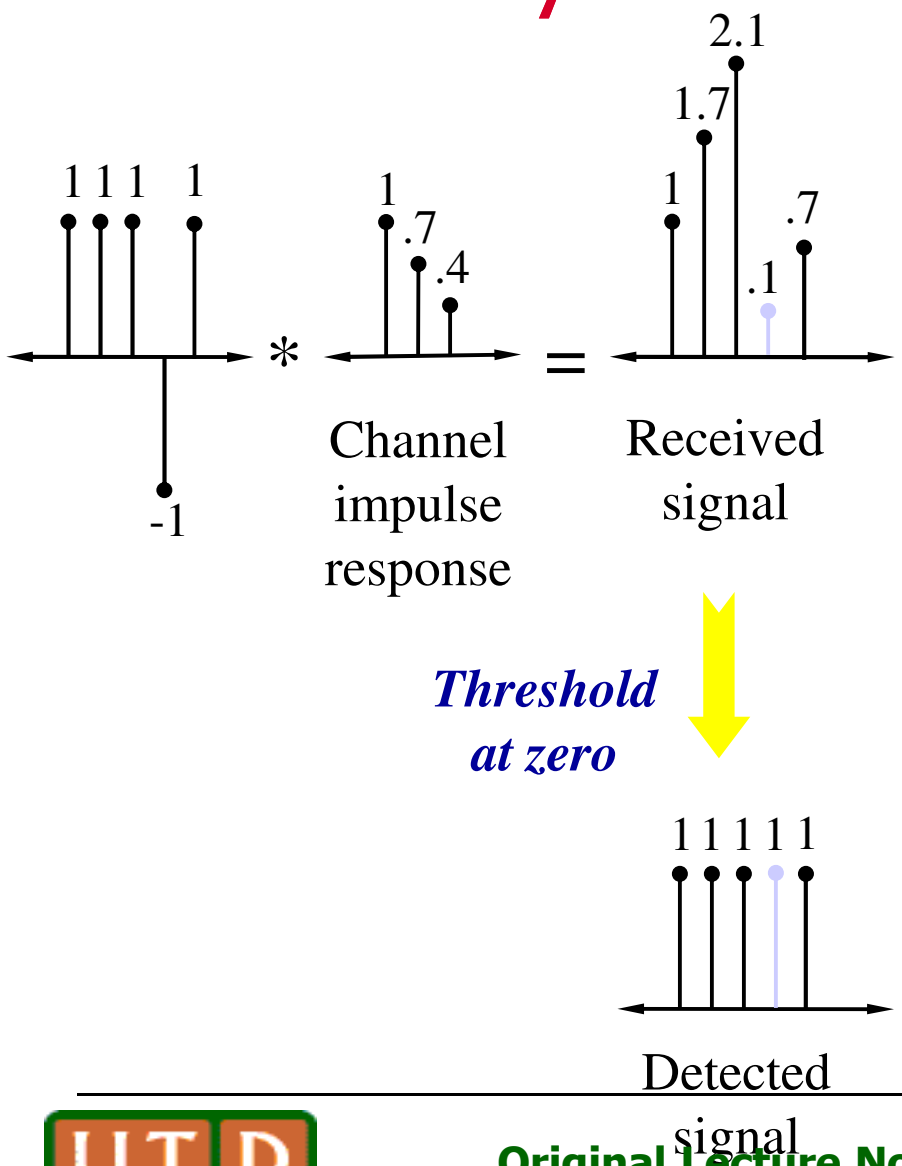

- Ideal channel
  - Impulse response is an impulse
  - Frequency response is flat
- Non-ideal channel causes ISI
  - Channel memory
  - Magnitude and phase variation
- Received symbol is weighted sum of neighboring symbols
  - Weights are determined by channel impulse response

Channel Impulse Response

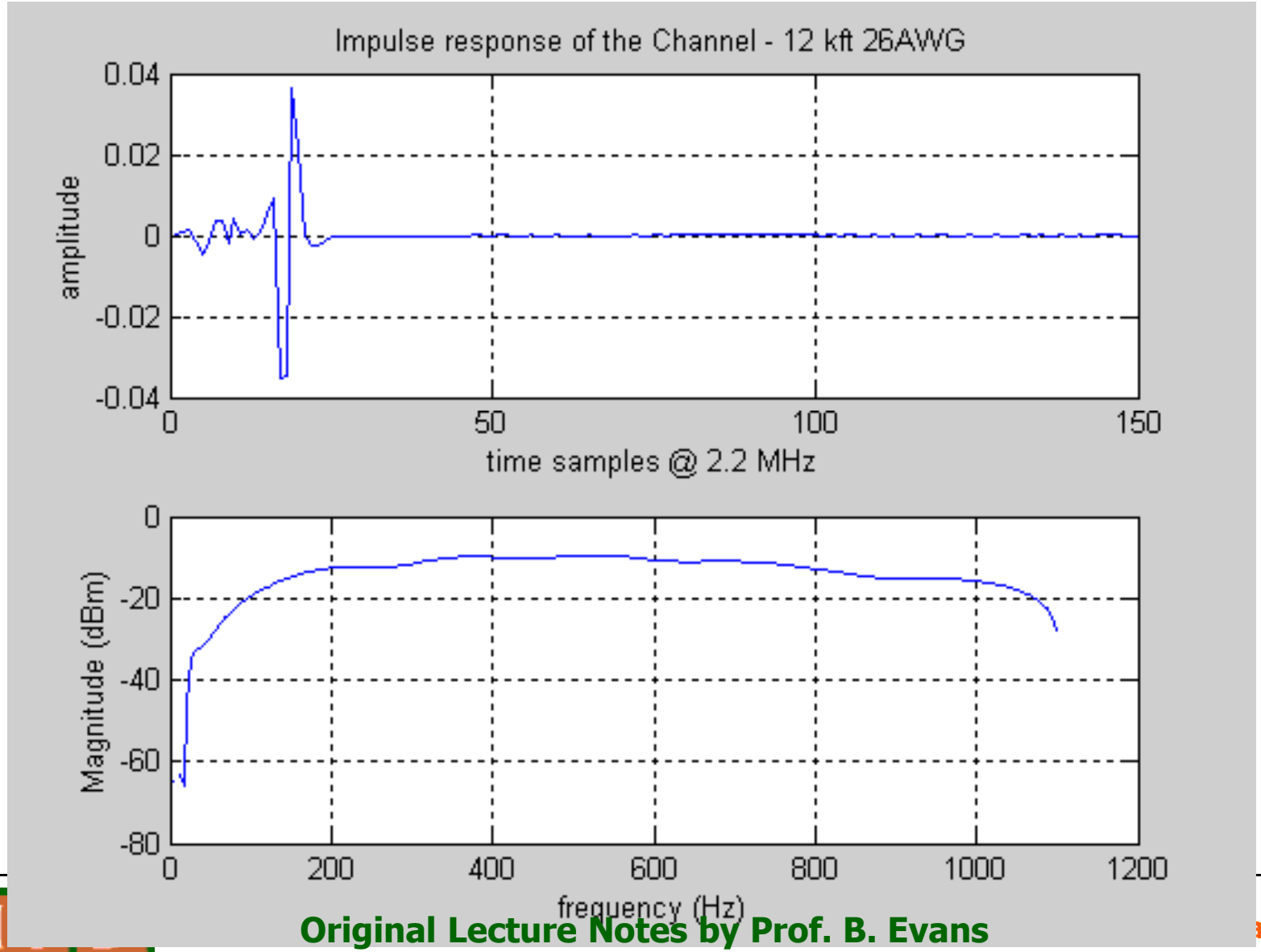

Cyclic Prefix Helps in Fighting ISI

- Provide guard time between successive symbols
  - No ISI if channel length is shorter than ν +1 samples
- Choose guard time samples to be a copy of the beginning of the symbol – cyclic prefix
  - Cyclic prefix converts linear convolution into circular convolution
  - Need circular convolution so that

    symbol $\otimes$ channel $\Leftrightarrow$ FFT(symbol) x FFT(channel)
  - Then division by the FFT(channel) can undo channel distortion

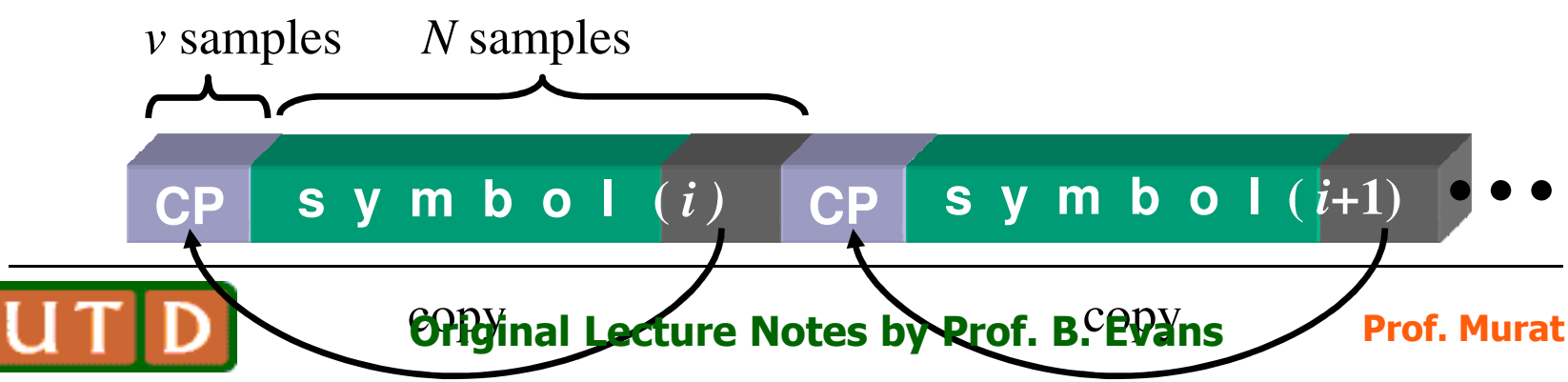

Combat ISI with Time-Domain Equalizer

- Channel length is usually longer than cyclic prefix
- Use finite impulse response (FIR) filter called a time-domain equalizer to shorten channel impulse response to be no longer than cyclic prefix length

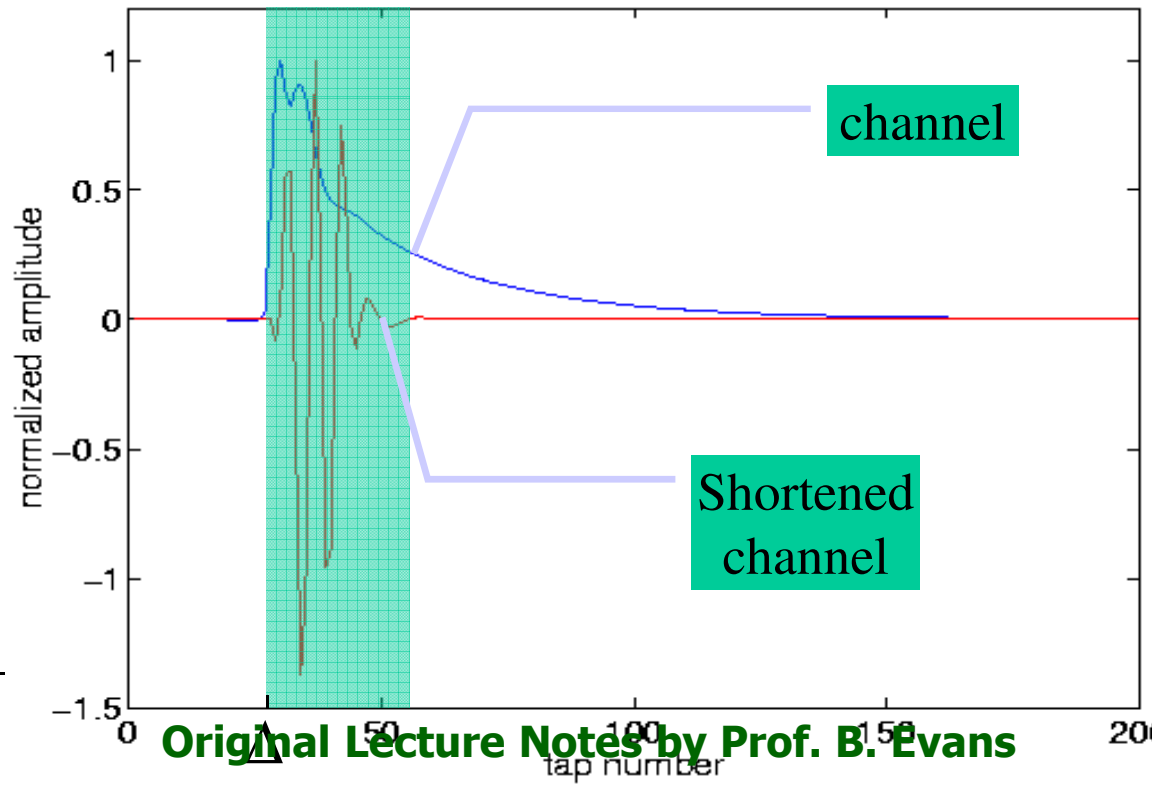

Convolution Review

- Discrete-time convolution

$$y[k] = \sum_{m=-\infty}^{\infty} h[m]\, x[k-m]$$

- Continuous-time convolution

$$y(t) = \int_{-\infty}^{\infty} h(\tau)\, x(t-\tau)\, d\tau$$

- For every k, we compute a new summation

$$x[k] \longrightarrow \boxed{h[k]} \longrightarrow y[k]$$

Represented by its impulse response

- For every value of t, we compute a new integral

$$x(t) \longrightarrow \boxed{h(t)} \longrightarrow y(t)$$

Represented by its impulse response

Finite Impulse Response (FIR) Filter

- Assuming that $h[k]$ is causal and has finite duration from $k = 0, \ldots, N\text{-}1$

$$y[k] = \sum_{m=0}^{N-1} h[m]\, x[k-m]$$

- Block diagram of an implementation (called a finite impulse response filter)

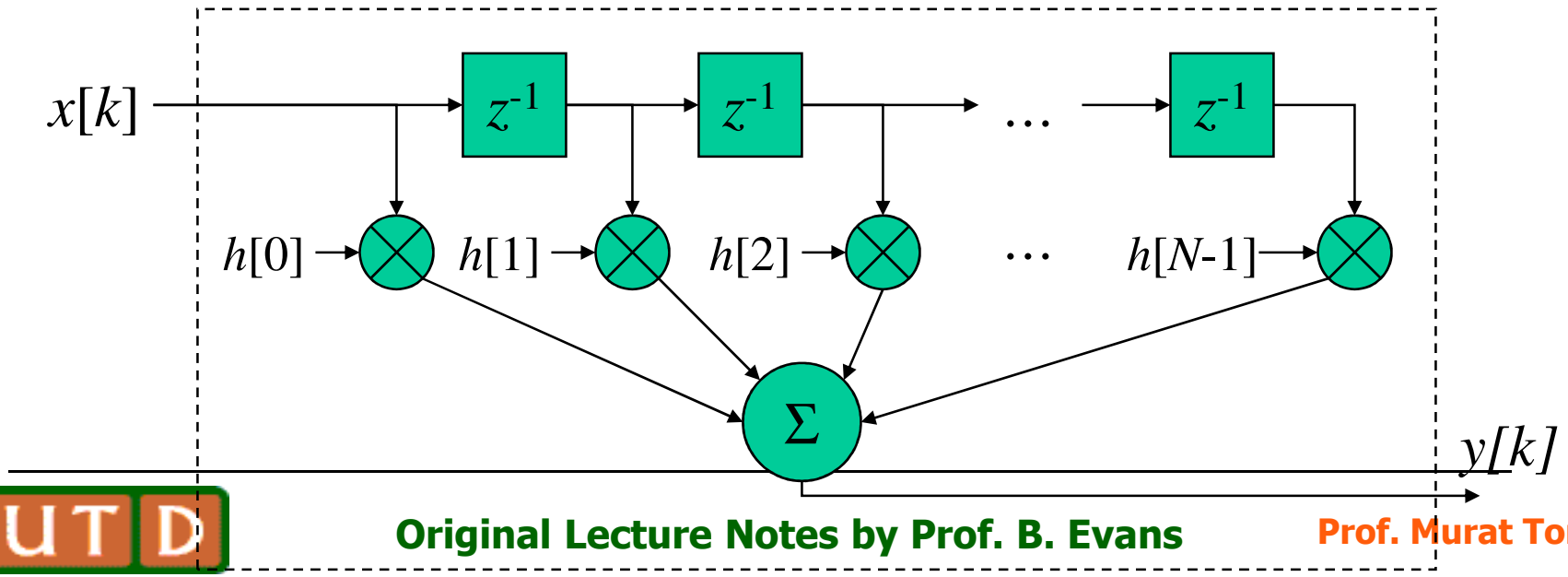

Frequency Domain Equalizer in ADSL

- Problem: FFT coefficients (constellation points) have been distorted by the channel.
- Solution: Use Frequency-domain Equalizer (FEQ) to invert the channel.
- Implementation: N/2 single-tap filters with complex coefficients.

Frequency Domain Equalizer in ADSL