A Framework for Golf Training Using Low-Cost Inertial Sensors

Ryan Burchfield and S. Venkatesan
Computer Engineering Program
The University of Texas at Dallas
Richardson, Texas 75080
Email: {ryanb,venky}@utdallas.edu

***Abstract*—Body Sensor Networks are rapidly expanding to everyday applications due to recent advancements in Micro-Electro-Mechanical Systems (MEMS) sensing, wireless communication and power management technologies. We leverage these advancements to develop a framework for the use of MEMS inertial sensors as a low-cost putting coach for golf. Accurate putting requires substantial control and precision that is acquired via significant practice. Unfortunately, many golfers are not aware that they are practicing flawed mechanics. An electronic coach has the capability to point out these flawed movements before they become the norm. Our framework is the first step to an electronic coach and consists of a model for a putting swing, the design of a custom sensor platform and the implementation of signal processing functions to accurately estimate the trajectory of the golf club. Based upon our model we propose the use of sensor fusion algorithms to increase accuracy without increasing hardware demands. The accuracy of the system is experimentally evaluated using a controlled test platform.**

I. Introduction

Body Sensor Networks (BSNs) provide the modern athlete unprecedented insight into their conditioning and practice routines. For example vital monitoring systems are a well studied and accepted workout accompaniment to track heart rate and temperature. A rapidly expanding application of BSNs is coaching tools to automatically give the athlete sport-specific feedback to improve technique and conditioning. In this paper we focus on creating a golf putting coach framework from the circuit board level up to signal processing for trajectory and position estimation. Based upon our swing model we develop a technique for filtering sensor data to improve accuracy. We also identify the next steps to complete the framework by providing athlete coaching.

We chose to focus our framework on golf because golf is a sport of delicate angles and forces. Consider the precision necessary to deliver a $\approx 4.3cm$ diameter ball to an $\approx 11cm$ diameter target $225m$ away in just 3 strokes or hits! The number of strokes that a *good* golfer should require to reach a hole is called the par of the hole. Most golf courses have a mixture of par 3, 4 and 5 holes and most par calculations allocate two strokes to putting with the remaining strokes delivering the ball to the putting green. Due to its frequent use we refine our focus to the coaching of putting.

Putting takes place on a putting green which is comprised of a very low cut smooth grass and may have obstacles in the form of gentle slopes to or away from the target hole. Unlike strokes that approach the putting green a putt should gently roll the ball toward the hole. The distance traveled by the ball for a typical putt does not exceed $7.5m$. The player carefully controls the trajectory of the ball by hitting it with the putter face perpendicular to the intended path and he or she controls the distance by varying the velocity of the club face at the time of impact. Inconsistency in technique makes it difficult for the average golfer to control these parameters simultaneously. Therefore, we propose the use of a BSN designed to track the trajectory and position of the golf club to provide instructional feedback to the player.

The framework is designed to provide instructional feedback to the player when their swing does not fall within the pre-defined tolerances of a proper swing model. Additionally, the framework helps the player achieve consistency by displaying key metrics obtained at various points of the swing. During practice sessions the player can incorporate this information to perfect the next putt.

Use of sensors to aid the game of golf has been explored in the past. Arvind and Bates [1], Ghasemzedeh et al. [2] [3] and K-Vest [4] present methods where multiple sensors are attached to the golfer's body and various parameters are computed. Ghasemzedeh uses sensors placed on the club in addition to sensors attached to the golfer. Some systems have sensors built into the club [5][6]. The work closest to our work is the system built by King et al. [7]. In their system they use accelerometers and gyroscopes (covering all 3 axes) that are built into the club handle. In contrast, our system is a stand-alone system that can be attached to any device and we use a fairly involved filtering method to remove bias and errors inherent in the sensors. Other technologies such as acoustic, infrared and camera based positioning have been built and are beyond the scope of this paper.

In this paper we work toward a complete BSN for golf training by developing the training framework using low-cost inertial sensors non-intrusively mounted to a golf club. The paper is structured to provide a background for golf putting and inertial sensing in Section II. Section III explains how the platform was designed and assembled to maximize accuracy. Section IV provides explanation and analysis of experiments conducted to evaluate the framework and Section V wraps up the paper and explores the next steps to expand the framework to a complete BSN for golf coaching.

978-0-7695-4065-8/10 $26.00 © 2010 IEEE
DOI 10.1109/BSN.2010.46

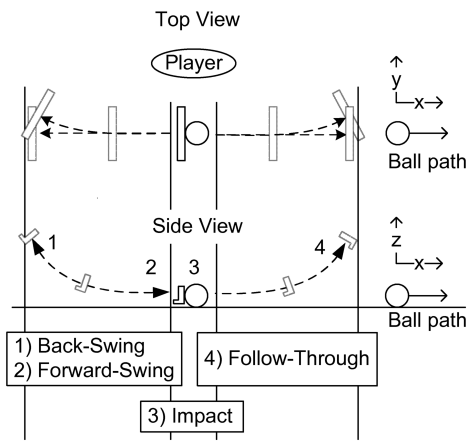

Fig. 1. Top and side view of putting motion with the four zones identified.

TABLE I
TYPICAL PUTTING TIMES

Back-Swing	Forward-Swing	Impact	Follow-Through	Total
700ms	350ms	30ms	550ms	1.63s

II. BACKGROUND

The framework is guided by the principals of two distinct fields, golf putting and inertial sensing. In this section we provide background information about golf putting techniques and then derive a model for a typical putt. Later we identify the inertial sensors that may be used to observe the swing and study how their operations contribute to our goal.

A. Swing Model

With the guidance of a professional putting instructor we derive a model for a proper putting swing and its variants containing common errors. The model divides a swing into four zones of interest: 1) back-swing, 2) forward-swing, 3) impact and 4) follow-through as shown in Figure 1. The relative duration for each zone is listed in Table I. The top-view depicts a linear and a separate slightly arced motion path for the golf club face as either may be encountered. The side-view only depicts a parabolic motion path in the vertical plane as this is common to virtually every swing. While examining the figure note the coordinate system that will be used throughout this paper. Positive z points upward perpendicular to the ground, positive x denotes the intended ball path and positive y points to the golfer while remaining perpendicular to x and z. There are many parameters of a golf swing that affect the trajectory of the golf ball. The goal of our model is to identify parameters that address precision and repeatability of the swing. We focus our attention on the following most critical parameters:

- Face angle (ψ) at impact (Figure 2)
- Loft angle (θ) at impact (Figure 3)
- Lie angle (ϕ) at impact (Figure 4)
- Velocity throughout swing
- Location (x', y') of impact on club face (Figure 4)

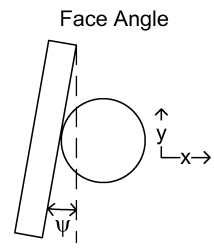

Fig. 2. Top view of club face and ball at impact showing face angle.

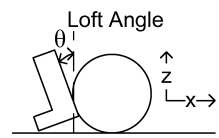

Fig. 3. Side view of club face and ball at impact showing loft angle.

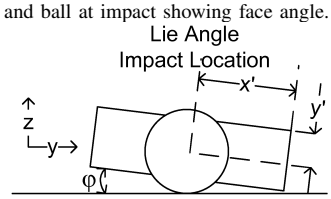

Fig. 4. Front view of club face and ball at impact showing lie angle and impact location.

- Motion path immediately surrounding impact[1]
- Tempo: Proportion of back-swing duration to forward-swing duration

By examining each of Figures 2, 3 and 4 it can be observed that the most predictable path of travel for the golf ball will occur when loft, face and lie angles are all zero. In fact the motion is so sensitive to error that a $\psi = \pm 3$ degree face angle will result in an error greater than $15cm$ for a $3m$ putt. This may seem minor but the diameter of the target hole is $\approx 11.5cm$. One might be tempted to alter the ball path using a non-zero face angle but this practice is discouraged because it is imprecise and difficult to repeat. Instead the ball path is adjusted by rotating the entire golfer around the ball so he or she remains perpendicular to the ball path. The velocity is of interest in order to provide the golfer with metrics to practice distance control and repeatability of their swing. A controlled swing has approximately constant velocity prior to impact and does not decelerate until after impact. A golf-club face contains a 'sweet-spot' near the center that should strike the ball for optimal performance; location of impact is identified to determine whether the ball hit this area. The motion path near impact is of interest for training accuracy. In the figure we see proper motion paths become parallel with the ball path a few centimeters prior to impact and remain parallel for a distance following impact. Finally, tempo aids in identification of proper acceleration and deceleration habits.

B. Inertial Sensors

Our framework is reliant upon inertial sensors collecting relative measurements in order to record the trajectory of the golf club. Specifically, we employ MEMS tri-axial linear accelerometers and multiple rate gyroscopes to obtain a total six degrees of rotational and translational freedom.

[1]Consider the distance between the two offset, parallel club faces in the Top View of Figure 1

1) Accelerometers: An accelerometer's output is the composition of static acceleration (gravity) and dynamic acceleration (motion). The presence of static acceleration in the absence of dynamic acceleration allows the accelerometer's tilt with respect to gravity to be computed. This measurement can be used to determine the absolute starting loft and lie angles of the golf club shaft.

Dynamic acceleration comes of interest for tracking the club's velocity and position throughout the swing. In a 2D translational plane perpendicular to the ground, velocity can be obtained by integrating the acceleration values throughout the swing and position is obtained by integrating the velocity values. When the 2D plane is no longer perpendicular to ground or when a 3D movement plane is considered, the static acceleration due to gravity must be removed from the signal prior to integration. If the accelerometer is allowed to rotate as well as translate then other sensors must be employed to measure the rotation angle. The rotation angles are used to rotate the acceleration vector to the original reference frame before removing gravity.

Accelerometer outputs have several possible sources of error including bias, sensitivity scale, sensitivity nonlinearity and cross-axis sensitivity. Bias manifests as a constant offset from zero when there is no acceleration on the axis. Bias values of an accelerometer change very little over time. Sensitivity scale refers to the variation of sensitivity (output signal vs. input force) over time. An accelerometer is most sensitive to low acceleration forces; this manifests as a change in sensitivity with respect to tilt angle and dynamic acceleration rate. Finally, due to minuscule axis mis-alignment during manufacturing a small portion of the acceleration in a given direction may be sensed by perpendicular axes. In this work we account for all of these sources except nonlinearity.

2) Rate Gyroscopes: A rate gyroscope measures the rate at which the sensor is rotating. The rate output is in the form of $degrees/sec$. A series of discrete rate measurements can be integrated with respect to time in order to produce an estimate of the sensor's current angular heading with respect to the starting position. Rate gyroscopes commonly work in conjunction with accelerometers to form inertial navigation units. Figure 5 shows a simple process for combining measurements from the two sensor types to output vectors for velocity($\vec{v}$), position($\vec{p}$) and heading($\vec{\Omega}$).

Rate gyroscopes are sensitive to the same errors as an accelerometer including bias, sensitivity scale, nonlinearity and cross-axis sensitivity. Gyroscopes tend to suffer more from bias errors because the bias value can change rapidly causing a drift in integrated gyroscope outputs. At this time we calibrate each gyroscope axis to remove bias and sensitivity scale errors. On-line filtering is used to remove bias drift.

III. Design

A key element of the framework for golf training is the creation of a custom hardware platform containing sensing, filtering, communication and processing elements. At each stage of the platform's design golfer's concerns were weighed against technical design concerns in order to produce a system with the best performance that golfers would readily accept.

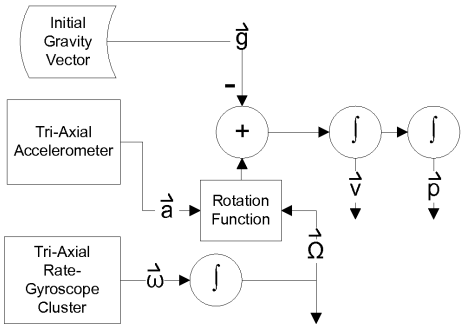

Fig. 5. Conceptual Process for Inertial Measurement

A. Golfer's Concerns

Golf clubs are instruments crafted with extreme care and precision. A given club has several factors that may be selected to the player's liking including: lie angle, loft angle[2], shaft length, shaft material and weight distribution. Given all of these factors it is not desirable for the framework to require a custom club or permanent, damaging modifications to a club. Furthermore, attachments to the club must be easily removable so that the player's practice club conforms to game rules.

This framework adds a measurement device to the golf club shaft, therefore care must be taken to have minimal impact on the swingweight, or weight distribution, of the golf club. A club with high swingweight has a balance point very close to the club head and feels heavier to the player. In order to have less effect on the swingweight we affix the sensor platform high on the shaft and close to the hand grip. Secondly, we make an effort to keep the size and weight of the attachment down. In addition to weight, visibility is a concern for the golfer. The sensor platform cannot impair the vision of the golfer when gazing down at the ball. Our designed platform has a flat back that mounts to the backside of the putter so there is no vision impairment to the front of the club and ball.

B. Technical Concerns

From a technical standpoint the hardware goal of the framework is to build a single board device capable of inertial sensing, filtering, processing and communication. As Figure 5 illustrates, (a) the position output is the result of a double integration with respect to time and (b) the rotation and velocity outputs result from a single integration with respect to time. A substantial challenge for the framework will be to minimize the error that accumulates in these outputs.

1) Inertial Sensors: We pay extra caution in selecting inertial sensors that introduce the least error while remaining low-cost. In general analog output sensors cost significantly less than digital output sensors so they were our primary focus.

[2]Clubs are manufactured with static lie and loft angles, not to be confused with dynamic lie and loft angles induced by the player's swing.

TABLE II
SENSOR COMPARISON

Sensor	Range	Noise Density	Non-Linearity	Cross Axis Sensitivity
Accelerometers				
1,2	$\pm 1.5g$	350 $\mu g/\sqrt{Hz}$	1.0%	5.0%
3	$\pm 3g$	350 $\mu g/\sqrt{Hz}$	0.3%	1.0%
4	$\pm 2g$	50 $\mu g/\sqrt{Hz}$	0.5%	2.0%
Rate Gyroscopes				
5	$\pm 150°/sec$	$0.04°/sec/\sqrt{Hz}$	0.1%	-
6	$\pm 300°/sec$	$0.035°/sec/\sqrt{Hz}$	1.0%	-
7	$\pm 100°/sec$	$0.017°/sec/\sqrt{Hz}$	1.0%	-

Our initial tests showed that an accelerometer with sensitivity of at least $\pm 2g$ is required to capture all elements of the golf putt without clipping the signal. Likewise, a gyroscope with at least $\pm 100°/sec$ range will suffice.

As in Table II we compared inertial sensors from multiple manufacturers based upon several parameters. The focal point of our comparison was the reported noise density value. The noise density provides a means of extrapolating the expected RMS noise or standard deviation of the sensor's output noise with the assumption that the noise is of Gaussian distribution. This is done according to Equation 1. The bandwidth term refers to the bandwidth set by a single pole low-pass filter used for anti-aliasing. This equation also shows that low-pass filter selection will be critical to removing both unwanted higher frequencies and reducing sensor noise.

$$noise_{rms} = noise\,density * \sqrt{bandwidth * \frac{\pi}{2}} \qquad (1)$$

We also consider non-linearity in selection of the sensors but to lesser extent. Finally, for accelerometers cross-axis sensitivity is compared to verify acceptable performance. We ultimately selected accelerometer 4, STMicroelectronics LIS344ALH, and gyroscope 7, STMicroelectronics LPR510AL & LY510ALH, for our application because of their dramatically lower noise densities. This combination of gyroscopes is also advantageous because the two integrated circuit chips can be mounted on the same flat plane allowing us to create a completely flat sensor board reducing size and weight. Sensor placement was also optimized for accuracy during the board layout stage. The sensors are lined up in the center of the board which will be placed directly over and parallel to the golf club shaft. To limit external interference sensors are also located as far from the radio communication module and antenna as possible.

At the time of design the precise optimum frequencies for the low-pass anti-aliasing filters were unknown. Our desire was to select the lowest possible frequency that does not distort the desired signal in order to reduce noise. To accommodate frequency selection by trial and error the measurement platform allocates ample space to inter-changeable through-hole resistors and capacitors for each sensor output.

2) Other Components: We selected the Atmel AVR ATxmega192A3 microcontroller to coordinate the sensor board. This microcontroller runs at a maximum 32MHz and contains two 12-bit analog to digital converters that can be run in parallel to achieve greater sampling throughput. The microcontroller has ample digital input/output pins to be configured for user input and peripheral connections. Importantly, the microcontroller has a low reported power draw at 21mA active at 32MHz. Attached to the microcontroller is a Roving Networks RN-41 Bluetooth Module for data forwarding to any bluetooth enabled PC. Bluetooth was selected for its ubiquity among laptop PCs, thus eliminating extra hardware. The board also contains a bidirectional USB to UART converter to establish wired serial communication when necessary. A small 3 gram lithium ion battery can power the board for approximately 40 minutes. The final prototype board design measures 4 inches by 1.75 inches and is depicted in Figure 6.

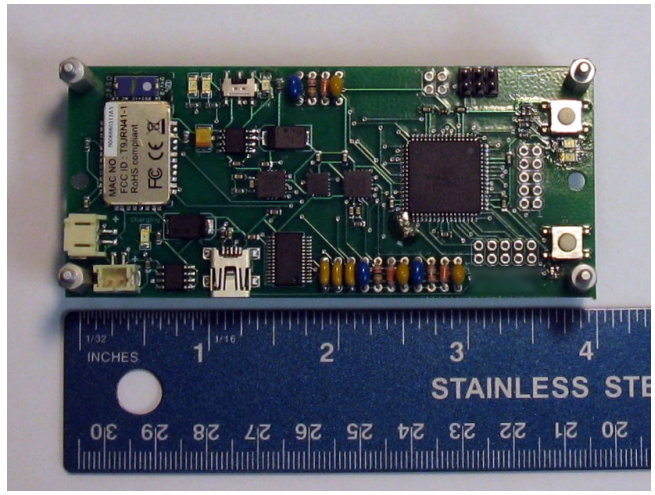

Fig. 6. Custom Sensor Board Prototype

IV. EXPERIMENTS

Before experimenting with an uncontrolled, imprecisely measured golf swing we create a controlled environment to simulate it. Recall from Figure 1 that a typical swing is of parabolic nature in the z plane and may be of linear nature in the y plane. With this information we can approximate the model of the swing as an arc with fixed radius. For a typical putt the arc radius extends from the inertial sensors along the golf club shaft to the golfer's belly-button. The arc radius for one of the authors is 24 inches. The simulator consists of a wood pendulum with a protractor ($1°$ $resolution$) for angle measurement. The sensor board is mounted vertically on the pendulum 61cm from the pivot point. This position is similar to the intended mounting on a golf club with the exception that the 'shaft' lie angle on the pendulum is 0 degrees and the golf club shaft has a 19 degree lie angle. We prepare the sensor board for experiments by calibrating the zero level offsets, sensitivity and cross-axis sensitivity for each sensor output. The microcontroller stores these values in non-volatile memory so that they may be applied at each boot. For each experiment we sample each sensor at 942Hz. In future

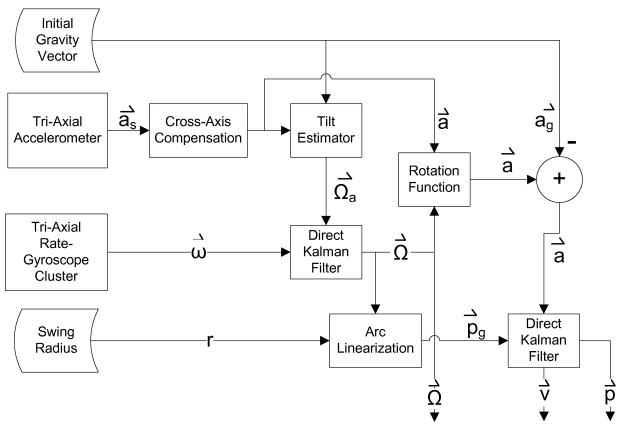

Fig. 7. Our Process for Translational & Rotational Inertial Measurement

experiments we plan to measure the effect of lowering the sample rate on output accuracy. Currently the microcontroller adjusts each sensor reading by its calibration offset, sensitivity and cross-axis sensitivity then transfers the sample to a PC using the on-board USB interface. The PC stores the data so that it can later be processed in Matlab to compute the position and trajectory of the device. The Matlab workload will later be split into native languages for the microcontroller and PC.

A. Signal Processing

Figure 5 illustrates the signal processing at a conceptual level. However, this simple process is vulnerable to ADC and sensor errors causing rapid accumulation of significant errors. Tilt angle measurements gathered from accelerometers are commonly used to remove error in gyroscope signals caused by drift but without GPS there is typically no available correlation to estimate error in accelerometer signals. Based upon our swing model we create a novel process for using gyroscopes to extrapolate linear displacement which we fuse with accelerometer measurements to estimate and remove acceleration error. The process utilizes Direct Kalman filters to fuse the estimates and is depicted in Figure 7. The following subsections explain the methodology of this cancellation.

1) Direct Kalman Filter: Vaganay et al. [8] developed a Kalman filter capable of fusing data from multiple sensors in order to exploit the strengths of each sensor. For example, rate gyroscope outputs have fairly low noise levels but they are subject to drift error stemming from fluctuating zero-rotation output voltages. On the other hand, accelerometers output fairly noisy measurements with little drift. We adopt the name Direct Kalman Filter coined by [9] for this fusion process. The term "Direct" comes from the fact that the Kalman filter performs the estimation of bias error and integration of the sensor values to produce the result. Explanation of the theory behind the Kalman filter lies beyond the scope of this paper so the interested reader is encouraged to read [10] and [11] for a full explanation.

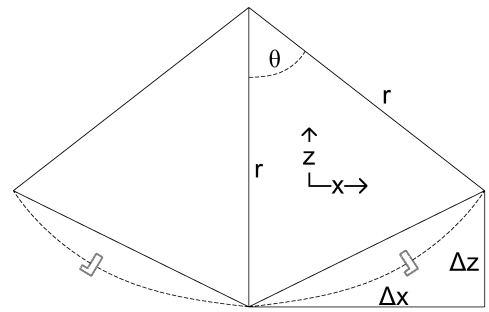

Fig. 8. Linear Travel Distances using Gyroscope Output

2) Accelerometer Assisted Rotation Estimate: Since accelerometers measure acceleration due to gravity the absolute angle of an accelerometer with respect to gravity can be estimated using trigonometric functions. Using equations 2 and 3 [12] we compute the absolute loft and lie angles for each sample. The absolute angles are then used as the *actual* input to the "Direct Kalman Filter" block of Figure 7 while the gyroscope rate outputs (ω) form the *control* input. The Kalman filter estimates the actual angle of rotation by integrating the angular velocities and removing its estimate of the gyroscope bias.

$$\theta = \arctan\left(\frac{A_x}{\sqrt{{A_y}^2 + {A_z}^2}}\right) \tag{2}$$

$$\phi = \arctan\left(\frac{A_y}{\sqrt{{A_x}^2 + {A_z}^2}}\right) \tag{3}$$

3) Gyroscope Assisted Position Estimate: A means for using the gyroscopes to estimate linear displacement of the golf club is not immediately obvious until we reexamine our swing model. Figure 8 is a parabolic approximation of the side-view from Figure 1. In this figure we observe that for any point in the swing linear displacement in the x and z planes can be computed using equations 4 and 6. Likewise the y displacement can be estimated using equation 5. These delta values form the *actual* input to the filter and the *control* input is driven by the accelerometer samples. This Kalman filter integrates the acceleration values to produce estimated velocity, integrates estimated velocity to estimate position and uses the *actual* input to estimate bias in the acceleration readings.

$$\Delta x = r * \sin\theta \tag{4}$$

$$\Delta y = r - r * \cos\psi \tag{5}$$

$$\Delta z = r - r * \cos\theta \tag{6}$$

B. Results

First the framework is evaluated in a static, non-moving environment to quantify random walk errors. The sensor board was placed in a stable location and collected samples for five minutes. The data was processed to determine the average positional error equals $0.45mm$ and average angular error

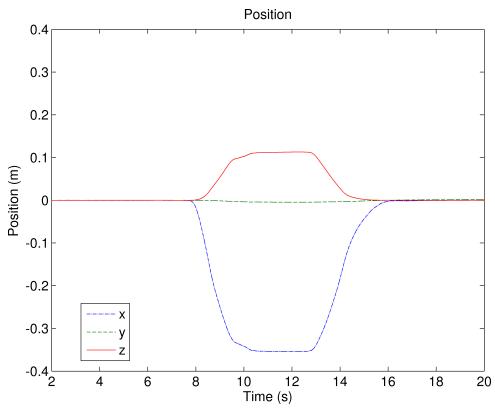

Fig. 9. Filtered Position Output

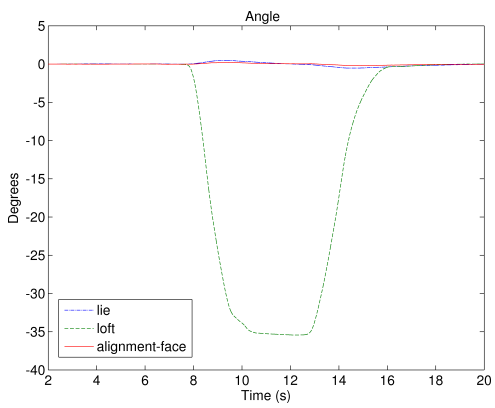

Fig. 10. Filtered Angle Output

equals $0.03°$ for the duration of the test. An experiment duration this small is acceptable because a golf swing requires integration for only 3 to 4 seconds.

Next we evaluate the framework in a dynamic environment by using the pendulum to swing the sensor board to $-35°$ then back to the starting position of $0°$. Both positions are marked with a solid obstacle to precisely limit the movement. We repeated this process 15 times to establish a dataset. Figures 9 and 10 show the filtered position and angle estimates for one of tests. We are interested in the system output at the peak of the swing and the return to the starting position. Table III reports the mean and standard deviation of the 3D measured position and angular error in the $-35°$ and $0°$ positions.

Close examination of the resultant graphs shows that when the pendulum is held in the upper position the acceleration output of the framework is an erroneous non-zero value. On the other hand the gyroscope rate outputs are zero. At this time we believe the non-zero acceleration value is due to the nonlinearity of the accelerometer sensitivity. We believe this can be compensated by adding another block to our signal process structure.

TABLE III
DYNAMIC EXPERIMENTAL RESULTS

$-35°$ Position		
	Absolute Position (mm)	Absolute Angle(°)
Mean Error	6.90	0.31
Standard Deviation	0.76	0.13
$0°$ Position		
	Absolute Position (mm)	Absolute Angle(°)
Mean Error	1.60	0.19
Standard Deviation	0.58	0.11

V. CONCLUSION

In this paper we developed a low-cost framework for golf putting coaching using inertial sensors. The framework expands upon previous work in the field by providing advanced filtering techniques that are combined with a swing model to provide more accurate angle and position estimates. To facilitate this fusion we identify a secondary means of estimating position utilizing gyroscope measurements. We believe that we can improve our estimates by adding compensation blocks to Figure 7 for non-linearity. Additionally, we plan to extrapolate position and velocity measurements from the sensor board to the face of the putter in order to determine impact location. Finally, we are developing a graphical user interface to provide coaching to the golfer based upon their swing.

ACKNOWLEDGMENT

The authors would like to thank Sandeep Dixit for his studies of inertial navigation and hardware debugging assistance.

REFERENCES

[1] D. K. Arvind and A. Bates, "The speckled golfer," in *BodyNets '08: Proceedings of the ICST 3rd international conference on Body area networks*, 2008, pp. 1–7.

[2] H. Ghasemzadeh, V. Loseu, E. Guenterberg, and R. Jafari, "Sport training using body sensor networks: a statistical approach to measure wrist rotation for golf swing," in *BodyNets '09: Proceedings of the Fourth International Conference on Body Area Networks*, 2009, pp. 1–8.

[3] H. Ghasemzadeh, V. Loseu, and R. Jafari, "Wearable coach for sport training: A quantitative model to evaluate wrist-rotation in golf," *Journal of Ambient Intelligence and Smart Environments*, vol. 1, pp. 173–184, Jan. 2009.

[4] (2009) K-vest website. [Online]. Available: http://www.k-vest.com/

[5] (2009) Sonic golf website. [Online]. Available: http://www.sonicgolf.com/

[6] (2006) Smartswing golf website. [Online]. Available: http://www.smartswinggolf.com/site/

[7] "Wireless mems inertial sensor system for golf swing dynamics," *Sensors and Actuators A: Physical*, vol. 141, no. 2, pp. 619 – 630, 2008.

[8] J. Vaganay, M. Aldon, and A. Fournier, "Mobile robot attitude estimation by fusion of inertial data," in *Robotics and Automation, 1993. Proceedings., 1993 IEEE International Conference on*, May 1993, pp. 277–282 vol.1.

[9] E. Foxlin, "Inertial head-tracker sensor fusion by a complementary separate-bias kalman filter," in *Virtual Reality Annual International Symposium, 1996., Proceedings of the IEEE 1996*, Mar 1996, pp. 185–194, 267.

[10] G. Welch and G. Bishop, "An Introduction to the Kalman Filter," *SIGGRAPH 2001 Course Notes*, 2001.

[11] R. E. Kalman, "A new approach to linear filtering and prediction problems," *Transactions of the ASME–Journal of Basic Engineering*, vol. 82, no. Series D, pp. 35–45, 1960.

[12] K. Tuck, "An3461: Tilt sensing using linear accelerometers," Jun. 2007.